Instructions for the use - Installation advices

DUAL FUEL COOKER

100% ELBA QUALITY MADE IN ITALY

ELBA

TALENT FOR COOKING

Made in Italy

Dear Customer,

Thank you for having purchased and given your preference to our product.

The safety precautions and recommendations reported below are for your own safety and that of others. They will also provide a means by which to make full use of the features offered by your appliance.

Please preserve this booklet carefully. It may be useful in future, either to yourself or to others in the event that doubts should arise relating to its operation.

This appliance must be used only for the task it has explicitly been designed for, that is for cooking foodstuffs. Any other form of usage is to be considered as inappropriate and therefore dangerous.

The manufacturer declines all responsibility in the event of damage caused by improper, incorrect or illogical use of the appliance.

IMPORTANT SAFETY PRECAUTIONS AND RECOMMENDATIONS

IMPORTANT: This appliance is designed and manufactured solely for the cooking of domestic (household) food and is not suitable for any non domestic application and therefore should not be used in a commercial environment.
The appliance guarantee will be void if the appliance is used within a non domestic environment i.e. a semi commercial, commercial or communal environment.

Read the instructions carefully before installing and using the appliance.

- This appliance has been designed and manufactured in compliance with the applicable standards for the household cooking products, including those for surface temperatures.
  Some people with sensitive skin may have a more pronounced temperature perception with some components although these parts are within the limits allowed by the norms.
  The complete safety of the appliance also depends on the correct use, we therefore recommend to always pay a extreme attention while using the product, especially in the presence of children.
- After having unpacked the appliance, check to ensure that it is not damaged and that the oven door closes correctly.
  In case of doubt, do not use it and consult your supplier or a professionally qualified technician.
- Packing elements (i.e. plastic bags, polystyrene foam, nails, packing straps, etc.) should not be left around within easy reach of children, as these may cause serious injuries.
- Some appliances are supplied with a protective film on steel and aluminium parts. **This film must be removed before using the appliance.**
- IMPORTANT: The use of suitable protective clothing/gloves is recommended when handling or cleaning this appliance.

- Do not attempt to modify the technical characteristics of the appliance as this may become dangerous to use. The manufacturer declines all responsibility for any inconvenience resulting from the inobservance of this condition.
- CAUTION: this appliance must only be installed in a permanently ventilated room in compliance with the applicable regulations.
- Do not operate your appliance by means of an external timer or separate remote-control system.
- Do not carry out cleaning or maintenance operations on the appliance without having previously disconnected it from the electric power supply.
- WARNING: Ensure that the appliance is switched off before replacing the oven lamp to avoid the possibility of electric shock.
- Do not use a steam cleaner because the moisture can get into the appliance therefore making it unsafe.
- Do not touch the appliance with wet or damp hands (or feet).
- Do not use the appliance whilst in bare feet.
- If you should decide not to use this appliance any longer (or decide to substitute another model), before disposing of it, it is recommended that it be made inoperative in an appropriate manner in accordance to health and environmental protection regulations, ensuring in particular that all potentially hazardous parts be made harmless, especially in relation to children who could play with unused appliances.
- The various components of the appliance are recyclable. Dispose of them in accordance with the regulations in force in your country. If the appliance is to be scrapped, remove the power cord.
- After use, ensure that the knobs are in the off position.
- Children less than 8 years of age shall be kept away unless continuously supervised.
- This appliance can be used by children aged from 8 years and above and persons with reduced physical, sensory or mental capabilities or lack of experience and knowledge if they have been given supervision or instruction concerning use of the appliance in a safe way and understand the hazards involved. Children shall not play with the appliance. Cleaning and user maintenance shall not be made by children without supervision.

- The manufacturer declines all liability for injury to persons or damage to property caused by incorrect or improper use of the appliance.
- WARNING: During use the appliance and its accessible parts become hot; they remain hot for some time after use.
  - Care should be taken to avoid touching heating elements (on the hob and inside the oven).
  - The door is hot, use the handle.
  - To avoid burns and scalds, young children should be kept away.
- Make sure that electrical cables connecting other appliances in the proximity of the cooker cannot come into contact with the hob or become entrapped in the oven door.
- WARNING: Unattended cooking on a hob with fat or oil can be dangerous and may result in fire. NEVER try to extinguish a fire with water, but switch off the appliance and then cover flame e.g. with a lid or a fire blanket.
- WARNING: Danger of fire: do not store items on the cooking surfaces.
- WARNING: When correctly installed, your product meets all safety requirements laid down for this type of product category. However special care should be taken around the rear or the underneath of the appliance as these areas are not designed or intended to be touched and may contain sharp or rough edges, that may cause injury.
- FIRST USE OF THE OVEN - it is advised to follow these instructions:
  - Furnish the interior of the oven as described in the chapter “CLEANING AND MAINTENANCE”.
  - Switch on the empty oven on max to eliminate grease from the heating elements.
  - Disconnect the appliance from the electrical power supply, let the oven cool down and clean the interior of the oven with a cloth soaked in water and neutral detergent; then dry carefully.

- CAUTION: Do not use harsh abrasive cleaners or sharp metal scrapers to clean the oven door glass since they can scratch the surface, which may result in shattering of the glass.
- Do not line the oven walls or base with aluminium foil. Do not place baking trays or the drip tray on the base of the oven chamber.
- FIRE RISK! Do not store flammable material in the oven or in the storage compartment.
- Always use oven gloves when removing the shelves and food trays from the oven whilst hot.
- Do not hang towels, dishcloths or other items on the appliance or its handle – as this could be a fire hazard.
- Clean the oven regularly and do not allow fat or oils to build up in the oven base or tray. Remove spillages as soon as they occur.
- Do not stand on the cooker or on the open oven door.
- Always stand back from the appliance when opening the oven door to allow steam and hot air to escape before removing the food.
- SAFE FOOD HANDLING: Leave food in the oven for as short a time as possible before and after cooking. This is to avoid contamination by organisms which may cause food poisoning. Take particular care during warmer weather.
- WARNING: Take care NOT to lift the cooker by the door handle.
- CAUTION: The cooking process has to be supervised. A short term cooking process has to be supervised continuously.
- The appliance must not be installed behind a decorative door in order to avoid overheating.
- The oven accessories (e.g. oven wire rack) must be fitted correctly as indicated at page 24.
- If the power supply cable is damaged, it must be replaced only by an authorized service agent in order to avoid a hazard.

1 COOKING HOB

Fig. 1.1

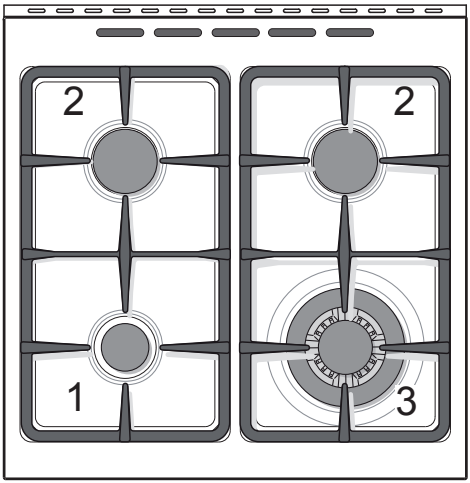

GAS BURNERS

1. Auxiliary burner (A)	1,00 kW
2. Semi-rapid burner (SR)	1,75 kW
3. Triple-ring burner (TR)	3,50 kW

Notes:

- The electric ignition is incorporated in the knobs.
- The appliance has a safety valve system fitted, the flow of gas will be stopped if and when the flame should accidentally go out.

CAUTION:
If the burner is accidentally extinguished, turn the gas off at the control knob and wait at least 1 minute before attempting to relight.

CAUTION:
Gas hobs produce heat and humidity in the environment in which they are installed.
Ensure that the cooking area is well ventilated by opening the natural ventilation grilles or by installing an extractor hood connected to an outlet duct that vents to the outside.

CAUTION:
If the hob is used for a prolonged time it may be necessary to provide further ventilation by opening a window or by increasing the suction power of the extractor hood (if fitted).

2 CONTROL PANEL

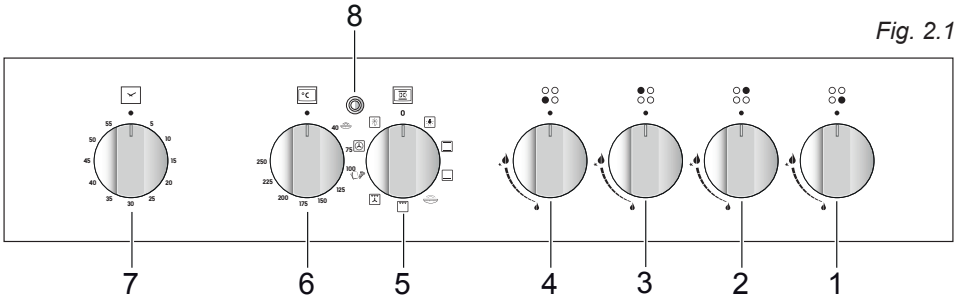

Fig. 2.1

CONTROLS DESCRIPTION

1. Front right burner control knob
2. Rear right burner control knob
3. Rear left burner control knob
4. Front left burner control knob
5. Electric oven selector control knob
6. Electric oven thermostat control knob
7. 60’ alarm knob
8. Oven temperature indicator light

Note:
Your appliance has been fitted with a cooling fan to achieve optimum efficiency of the controls and to ensure lower surface temperatures are maintained.
When the oven is operating the cooling fan motor switches ON/OFF depending on temperature. Depending on cooking temperatures and times, the cooling fan may run on even after appliance has been switched off. The duration of this time is dependent on previous cooking temperature and duration.

3 USE OF THE HOB BURNERS

GAS BURNERS

Gas flow to the burners is adjusted by turning the knobs (illustrated in figs 3.1) which control the safety valves.
Turning the knob, so that the indicator line points to the symbols printed on the panel, achieves the following functions:

– symbol ● off

– symbol full on (nominal rate)

– symbol reduced rate

√ To reduce the gas flow to minimum, rotate the knob anti-clockwise to point the lever towards the small flame symbol.

√ The maximum aperture position permits rapid boiling of liquids, whereas the minimum aperture position allows slower warming of food or maintaining boiling conditions of liquids (simmering).

√ Other intermediate operating adjustments can be achieved by positioning the lever between the maximum and minimum aperture positions, and never between the maximum aperture and off positions.

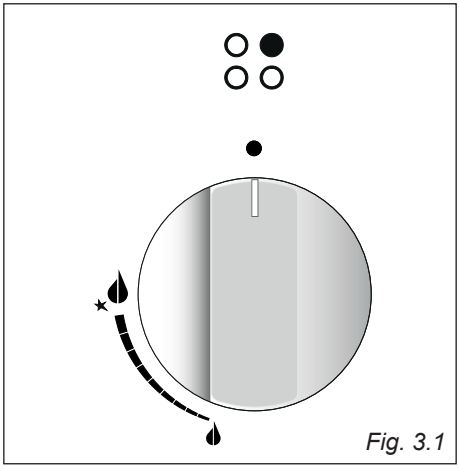

Fig. 3.1

NOTE:
The knob and symbols may vary.

Caution!
Do not cover the hob with aluminium foils.

Caution!
The cooking hob becomes very hot during operation.
Keep children well out of reach.

N.B. When the cooker is not being sed, set the gas knobs to their closed positions and also close the cock valve on the gas bottle or the main gas supply line.

LIGHTING THE BURNERS

To ignite the burner, the following instructions are to be followed:

1. Press in the corresponding knob and turn counter-clockwise (fig. 3.2) to the full flame position marked by the symbol (fig. 3.1); hold the knob in until the flame has been lit.
   In the case of a mains failure light the burner with a match or lighted taper.
2. Wait for a few seconds after the gas burner has been lit before letting go of the knob (valve activation delay).
3. Adjust the gas valve to the desired position.

If the burner flame should go out for some reason, the safety valve will automatically stop the gas flow.
To re-light the burner, return the knob to the closed " ● " (OFF) position, **wait for at least 1 minute** and then repeat the lighting procedure.

If your local gas supply makes it difficult to light the burner with the knob set to maximum, set the knob to minimum and repeat the operation.

CHOICE OF THE BURNER

On the control panel, near every knob there is a diagram that indicates which burner is controlled by that knob.
The suitable burner must be chosen according to the diameter and the capacity used.
As an indication, the burners and the pots must be used in the following way:

DIAMETERS OF PANS WHICH MAY BE USED ON THE BURNERS		
BURNERS	**MINIMUM**	**MAXIMUM**
Auxliliary	12 cm	14 cm
Semi-rapid	16 cm	24 cm
Triple-ring	26 cm	28 cm
do not use pans with concave or convex bases		

It is important that the diameter of the pot be suitable to the potentiality of the burner so as not to compromise the high output of the burners and therefore energy waste. A small pot on a large burner does not give you a boiling point in a shorter amount of time since the capacity of heat absorption of a liquid mass depends on the volume and the surface of the pot.

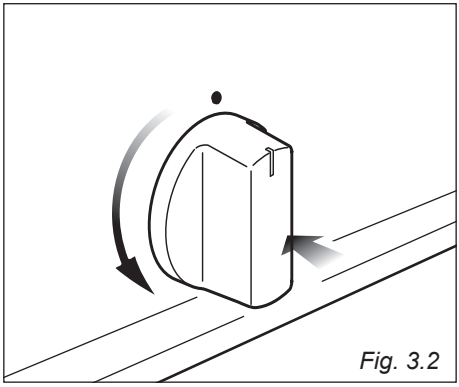

Fig. 3.2

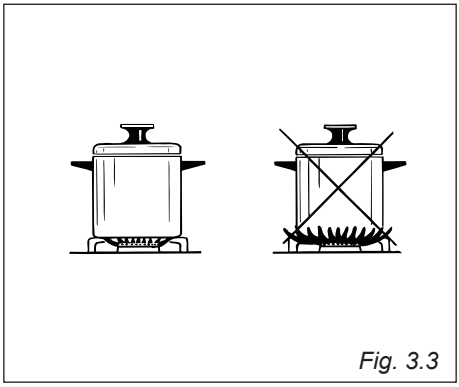

Fig. 3.3

4 MULTIFUNCTION OVEN

Attention: The oven door becomes very hot during operation.
Keep children away.
Models with lid: the cooker lid must be kept open when the oven/grill is in use.

GENERAL FEATURES

As its name indicates, this is an oven that presents particular features from an operational point of view.
In fact, it is possible to insert 8 different programs to satisfy every cooking need.
The 8 positions, thermostatically controlled, are obtained by 4 heating elements which are:

- Lower element
- Upper element
- Grill element
- Circular element

NOTE:

Upon first use, it is advisable to operate the oven (at the maximum temperature) for 60 minutes in the position and for another 15 minutes in the positions and , to eliminate possible traces of grease on the heating elements.
Clean the oven and accessories with warm water and washing-up liquid.

OPERATING PRINCIPLES

Heating and cooking in the MULTIFUNCTION oven are obtained in the following ways:

a. by normal convection
The heat is produced by the upper and lower heating elements.

b. by forced convection
A fan sucks in the air contained in the oven muffle, which sends it through the circular heating element and then sends it back through the muffle.
Before the hot air is sucked back again by the fan to repeat the described cycle, it envelops the food in the oven, provoking a complete and rapid cooking.
It is possible to cook several dishes simultaneously.

c. by semi-forced convection
The heat produced by the upper and lower heating elements is distributed throughout the oven by the fan.

d. by radiation
The heat is irradiated by the infra red grill element.

e. by radiation and ventilation
The irradiated heat from the infra red grill element is distributed throughout the oven by the fan.

f. by ventilation
The food is defrosted by using the fan only function without heat.

WARNING:

The door is hot, use the handle.

During use the appliance becomes hot. Care should be taken to avoid touching heating elements inside the oven.

Do not line the oven walls or base with aluminium foil. Do not place baking trays or the drip tray on the base of the oven chamber.

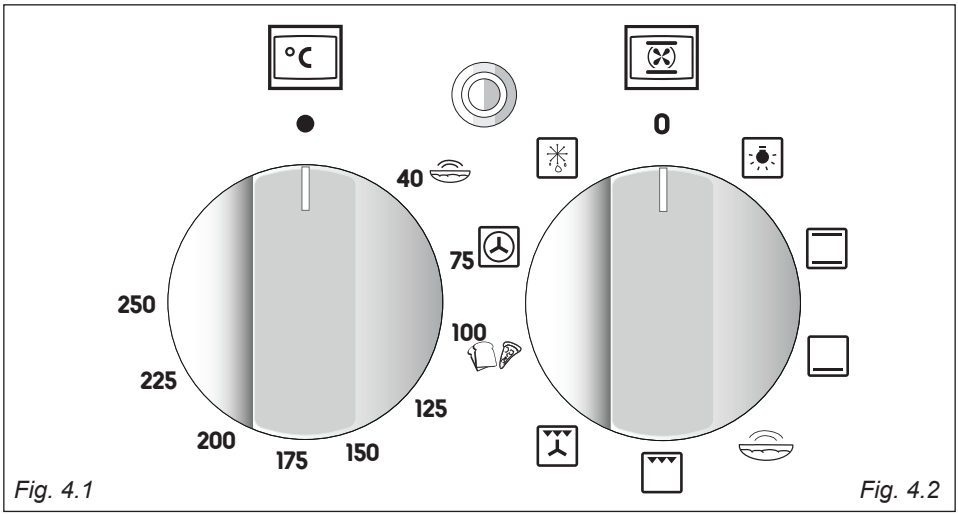

Fig. 4.1 *Fig. 4.2*

THERMOSTAT KNOB (fig. 4.2)

To turn on the heating elements of the oven, set the function selector knob on the desired program and the thermostat knob onto the desired temperature.
To set the temperature, it is necessary to make the knob indicator meet the chosen number.
The elements will turn ON or OFF automatically according to the energy need which is determined by the thermostat.
The thermostat indicator light on the control panel will illuminate when the oven is switched on and turns off when the oven reaches the correct temperature.
The light will cycle on and off during cooking.

FUNCTION SELECTOR KNOB (fig. 4.1)

Rotate the knob clockwise to set the oven for one of the following functions:

OVEN LIGHT

By turning the knob onto this setting we light the oven cavity.
The oven remains alight while any of the functions is on.

TRADITIONAL CONVECTION COOKING

The upper and lower heating elements are switched on. The heat is diffused by natural convection and the temperature must be regulated between 40°C and the maximum position with the thermostat knob.
It is necessary to preheat the oven before introducing the foods to be cooked.

Recommended for:

For foods which require the same cooking temperature both internally and externally, i. e. roasts, spare ribs, meringue, etc.

LOWER HEATING ELEMENT

Only the lower element is switched on. Heat is distributed by natural convection.
The thermostat can be set between 40°C and the maximum position with the thermostat knob.

Recommended for:
This mode is particularly suitable to complete cooking of dishes that require higher temperature at the bottom.

LEAVENING - UPPER HEATING ELEMENT

In this position only the upper element is switched on.
Heat is distributed by natural convection.
For normal cooking the temperature must be regulated between 40 and 250°C Maximum, Leavening is carried out at 40°C.

Recommended for:
This mode is particularly suitable to complete cooking of dishes that require higher temperature at the top; for faster, more even leavening, all types of flour-based doughs and fresh, home-made pasta

GRILLING

The infrared grill element at the top of the oven and the rotisserie come on.
The heat is dispersed by radiation.
Use with the oven door closed and the temperature must be regulated **between 40°C and 225°C maximum** with the thermostat knob.
For cooking hints, see the chapter “USE OF THE GRILL”.
Always grill with the oven door closed.

Recommended for:
Intense grilling, browning, cooking au gratin and toasting, cooking with the rotisserie, etc.

VENTILATED GRILL COOKING

The infra-red grill and the fan are on. The heat is mainly diffused by radiation and the fan then distributes it throughout the oven.
Use with the oven door closed and the temperature must be regulated **between 40°C and 225°C maximum** with the thermostat knob.
It is necessary to preheat the oven for about 5 minutes.
For correct use see chapter “GRILLING AND COOKING AU GRATIN”.
Always grill with the oven door closed.

Recommended for:
For grill cooking when a fast outside browning is necessary to keep the juices in, i. e. veal steak, steak, hamburger, etc.

BREAD/PIZZA - CONVECTION COOKING WITH VENTILATION

The upper and lower heating elements and the fan turn on.
The heat coming from the top and bottom is diffused by forced convection.
The temperature must be regulated between 40°C and the maximum position with the thermostat knob.

Recommended for:
For foods of large volume and quantity which require the same internal and external degree of cooking; for ie: bread, pizza, rolled roasts, turkey, legs, cakes, etc.

FAN FORCED

The circular element and the fan are on.
The heat is diffused by forced convection and the temperature must be regulated between 40°C and the maximum position with the thermostat knob.
It is not necessary to preheat the oven.

Recommended for:
For foods that must be well done on the outside and tender or rare on the inside, i.e. lasagna, lamb, roast beef, whole fish, etc.

DEFROSTING FROZEN FOODS

Only the oven fan is on.
To be used with the thermostat knob on " ● " because the other positions have no effect.
The defrosting is done by simple ventilation without heat.

Recommended for:

To rapidly defrost frozen foods; 1 kilogram requires about one hour.
The defrosting times vary according to the quantity and type of foods to be defrosted.

COOKING ADVICE

STERILIZATION

Sterilization of foods to be conserved, in full and hermetically sealed jars, is done in the following way:

a. Set the switch to position .
b. Set the thermostat knob to position 175°C and preheat the oven.
c. Fill the dripping pan with hot water.
d. Set the jars onto the dripping pan making sure they do not touch each other and the door and set the thermostat knob to position 130°C.

When sterilization has begun, that is, when the contents of the jars start to bubble, turn off the oven and let cool.

ROASTING

To obtain classical roasting, it is necessary to remember:

- that it is advisable to maintain a temperature between 180 and 200°C.
- that the cooking time depends on the quantity and the type of foods.

SIMULTANEOUS COOKING OF DIFFERENT FOODS

The MULTIFUNCTION oven set on position or gives simultaneous heterogeneous cooking of different foods. Different foods such as fish, cake and meat can be cooked together without mixing the smells and flavours.
This is possible since the fats and vapors are oxidized while passing through the electrical element and therefore are not deposited onto the foods.
The only precautions to follow are:

- The cooking temperatures of the different foods must be as close to as possible, with a maximum difference of 20- 25°C.
- The introduction of the different dishes in the oven must be done at different times in relation to the cooking times of each one.

The time and energy saved with this type of cooking is obvious.

REGENERATION

Set the switch to position and the thermostat knob to position 150°C.
Bread becomes fragrant again if wet with a few drops of water and put into the oven for about 10 minutes at the highest temperature.

USE OF THE GRILL

Preheat the oven for about 5 minutes.
Introduce the food to be cooked, positioning the rack as close to the grill as possible.
The dripping pan should be placed under the rack to catch the cooking juices and fats.

Grilling with the oven door closed.

It is recommended that you do not grill for longer than 30 minutes at anyone time.

Attention: The external parts of the oven become hot during operation.
Keep children well out of reach.

GRILLING AND COOKING “AU GRATIN”

Grilling may be done using the grill+fan setting , in this setting the hot air completely surrounds the food that is to be cooked, to give a more even and rapid cooking process.
Set the temperature knob **between 40°C and 225°C maximum**, preheat the oven, then simply place the food on the grid.
Close the door until grilling is complete.
Adding a few dabs of butter before the end of the cooking time gives the golden “au gratin” effect.

Grilling with the oven door closed.
Do not grill for longer than 30 minutes at any one time.
ATTENTION: the oven door becomes very hot during operation. Keep children away.

OVEN COOKING

To cook, before introducing the food, preheat the oven to the desired temperature.
When the oven has reached the desired temperature, introduce the food, control the cooking time and tum off the oven 5 minutes before the theoretical time to recuperate the stored heat.

COOKING EXAMPLES

Temperatures are approximate as they vary depending on the quality and amount of food.
Remember to use ovenproof dishes and to adjust the oven temperature during cooking if necessary.

DISH	TEMPERATURE
Baked lasagna	220°C
Baked onions	225°C
Beignets	160°C
Cakes	180°C
Cheese soufflé	200°C
Chicken breasts in tomato	200°C
Cream puffs	200°C
Doughnuts	180°C
Grilled chicken - roast chicken	220°C
Grilled veal joint	225°C
Lemon cake	220°C
Marmalade pie	225°C
Meat balls	200°C
Oven cooked pasta	220°C
Pizza with anchovies	225°C
Plum pie	200°C
Potatoes soufflé	200°C
Potatoes in milk	200°C
Pound cake	225°C
Rice creol	225°C
Roast beef	220°C
Roast veal	200°C
Spinach crepes	200°C
Sole fish filet	200°C
Stuffed potatoes	225°C
Turkish shishkebab	225°C
Veal meatloaf	200°C
Whiting	200°C

The external parts of the appliance become hot during operation.
Keep children well out of reach.

PIZZA STONE (SOME MODELS ONLY)

TIPS ON GETTING THE MOST OUT OF YOUR STONE, AND KEEPING IT IN PERFECT CONDITION

The Pizza Stone is a fire-stone made exclusively from natural minerals, resistant to high temperatures (over 600°C), for baking bread, focaccia, pies, and any flour-based product, especially pizza, in your home oven, delivering the same quality and results as professionals in bakeries and pizzerias.

There are two secrets to this stone:

1. Due to the natural porosity and millions of micro pores, the stone absorbs the humidity of the dough during the cooking process, so the bread or pizza dough dries properly, becoming crispy and crunchy, especially the crust.
2. **It retains heat** while the oven is preheated, and then releases it during the cooking process, as intense, uniform and constant heat to cook the pizza evenly on the inside. With this stone, you will never again have semi-cookied or raw dough in the middle!

TIPS FOR KEEPING THE PIZZA STONE CLEAN OVER TIME

Do not worry if the stone gets stained. It is completely normal, and in fact inevitable, due to the natural porous nature of the material. Do not attempt to wash stains off, because they are permanent, and represent “character marks”, something to show off your culinary skills. Like certain cooking tools, the more it is used, the more it ages, delivering results that improve over time.

Utmost hygiene and safety. The Pizza Stone is entirely natural, safe, certified, and hygienic, thanks to the high temperature it is exposed to during every heating cycle, it “sterilizes” itself.

As needed, use a utensil such as a metal spatula or knife to remove any residue from the surface of the stone (e.g. burned mozzarella). Clearly, this must be done after having verified that the stone has cooled sufficiently to be handled.

Never use washing up liquid on the stone. Rinse with water only. Use a clean wet sponge to remove food residue from the stone. Do not attempt to remove greasy spots from the stone, or dark stains cause by combustion of the dough, they will not come off because of the porosity of the stone. Instead, leaving the stone in a cleaned but used state prevents things from sticking to the surface and therefore easier to use.

Never soak the stone. A simple rinse should be sufficient. If the stone absorbs too much liquid when cold, it might break the next time it is heated in the oven.

Never use butter or other fats to cook on the stone. Not only might they burn, it will also create smoke inside the oven.
To make a pizza or bread, first prepare a dough using water, yeast and flour, and allow to leaven inside a container for some hours before topping and placing in the oven.

LEAVENING FUNCTION

The leavening function cuts the leavening time in half, and makes the dough uniform, elastic and easy to kneed.

Compared to leavening on a surface in a room, dough leavened in the oven using our special function rises better and more quickly, saving you time and helping you make perfect dough for tasty, soft and fragrant pizzas.

Put the ball of dough into a plastic or glass oven proof container, and place it on a grill in the middle of the oven.

Turn the control knob to the “leavening” icon, and set the temperature to 40 degrees by turning the other control knob to the thermostat icon.

Let the dough leaven in the oven for at least 3 hours, though this will depend greatly on the type of dough and the type of flour in the dough, and the ambient temperature in summer or winter. The dough is ready when it has doubled in size and the surface feels soft and elastic.

5 MINUTE COUNTER

MINUTE COUNTER

The minute counter is a timed acoustic warning device which can be set for a maximum of 60 minutes.
The knob (fig. 5.1) must be rotated clockwise as far as the 60 minute position and then set to the required time by rotating it anticlockwise.

IMPORTANT WARNING: This is only a mechanical timer.
Remember to turn off the oven/grill manually.

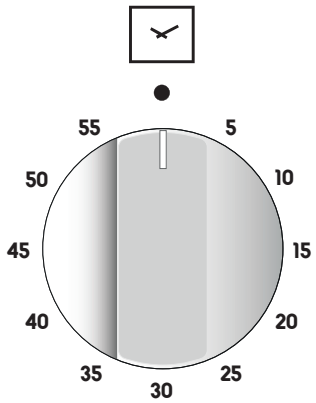

Fig. 5.1

6 CLEANING AND MAINTENANCE

GENERAL ADVICE

- **Before you begin cleaning, you must ensure that the appliance is disconnected from the electrical power supply.**
- When the appliance is not being used, it is advisable to keep the gas tap closed.
- The periodical lubrication of the gas taps must be done only by specialized personnel.
- If a tap becomes stiff, do not force; contact your local After Sales Service Centre.
- It is advisable to clean when the appliance is cold and especially when cleaning the enamelled parts.
- Avoid leaving alkaline or acidic substances (lemon juice, vinegar, etc.) on the surfaces.
- Avoid using cleaning products with a chlorine or acidic base.
- **Important: The use of suitable protective clothing/gloves is recommended when handling or cleaning of this appliance.**

WARNING: When correctly installed, your product meets all safety requirements laid down for this type of product category. However special care should be taken around the rear or the underneath of the appliance as these areas are not designed or intended to be touched and may contain sharp or rough edges, that may cause injury.

ENAMELLED PARTS

All the enamelled parts must be cleaned with a sponge and soapy water or other non-abrasive products.
Dry preferably with a microfibre or soft cloth.
Acidic substances like lemon juice, tomato sauce, vinegar etc. can damage the enamel if left too long.

STAINLESS STEEL AND ALUMINIUM PARTS, PAINTED AND SILK-SCREEN PRINTED SURFACES

Clean using an appropriate product.
Always dry thoroughly.

IMPORTANT: these parts must be cleaned very carefully to avoid scratching and abrasion. You are advised to use a soft cloth and neutral soap.

CAUTION: Do not use abrasive substances or non-neutral detergents as these will irreparably damage the surface.

Important: The manufacturer declines all liability for possible damage caused by the use of unsuitable products to clean the appliance.

Attention! The appliance gets very hot, mainly around the cooking areas. It is very important that children are not left alone in the kitchen when you are cooking.

Do not use a steam cleaner because the moisture can get into the appliance thus make it unsafe.

Do not use harsh abrasive cleaners or sharp metal scrapers to clean the oven door glass or the glass lid (models with glass lid only) since they can scratch the surface, which may result in shattering of the glass.

GLASS LID (models with glass lid)

For cleaning purposes, the lid can be easily removed upwards once taken to the upright position.
Should the hinges slip off, replace them in their housing being careful that:

- The right housing must receive the hinge marked “**D**” while the left housing must receive the hinge marked “**S**” (fig. 6.1).

REGULATING OF THE BALANCE

Lower the lid and check the correct balance. While opened at 45° it should hang up.
The springs of the hinges can be adjusted if necessary by turning the screws “**R**” clockwise (fig. 6.1).

Models with glass lid

Do not shut lid when burner alight.

ATTENTION

✓ Do not lower the glass lid when the gas burners are still hot or when the oven is working or still hot.

✓ Do not lay on the glass lid hot pans and heavy kitchen utensils.

✓ Dry off any liquid whitch may have spilt on the cover before opening it.

SOME MODELS ONLY

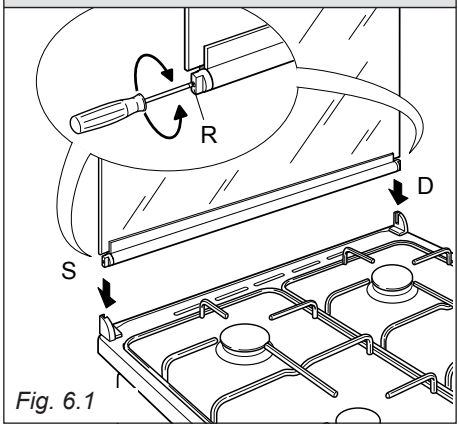

Fig. 6.1

INSIDE OF OVEN

The oven should always be cleaned after use when it has cooled down.
The cavity should be cleaned using a mild detergent solution and warm water. Suitable proprietary chemical cleaners may be used after first consulting with the manufacturers recommendations and testing a small sample of the oven cavity. Abrasive cleaning agents or scouring pads/cloths should not be used on the cavity surface.

NOTE: The manufacturers of this appliance will accept no responsibility for damage caused by chemical or abrasive cleaning.

Let the oven cool down and pay special attention no to touch the hot heating elements inside the oven cavity.

GAS TAPS

In the event of operating faults in the gas taps, call the Service Department.

BURNERS

They can be removed and washed with soapy water only.
They will remain always perfect if cleaned with products used for silverware.
After cleaning or wash, check that burner-caps and burner-heads are dry before placing them in the **respective housings.**

Check that the electrode "**S**" (figs. 6.2 - 6.4) next to each burner is always clean to ensure troublefree sparking.

Check that the probe "**T**" (figs. 6.2 - 6.4) next to each burner is always clean to ensure correct operation of the safety valves.

Both the probe and ignition plug must be very carefully cleaned.

Note: To avoid damage to the electric ignition do not use it when the burners are not in place.

CORRECT REPLACEMENT OF THE AUXILIARY AND SEMI-RAPID BURNERS

It is very important to check that the burner flame distributor "**F**" and the cap "**C**" has been correctly positioned (see figs. 6.2 - 6.3) - failure to do so can cause serious problems.

CORRECT REPLACEMENT OF THE TRIPLE RING BURNER

The triple ring burner must be correctly positioned (see fig. 6.6); the burner rib must be enter in their logement as shown by the arrow (fig. 6.4).
The burner correctly positioned must not rotate (fig. 6.5).
Then position the cap "**A**" and the ring "**B**" (figs. 6.5 - 6.6).

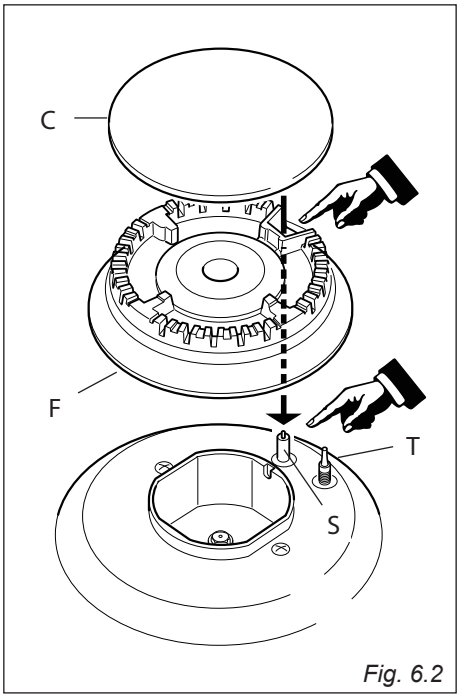

Fig. 6.2

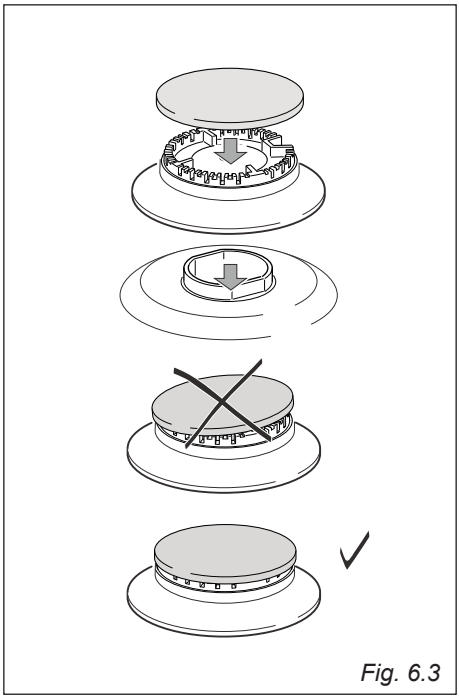
Fig. 6.3

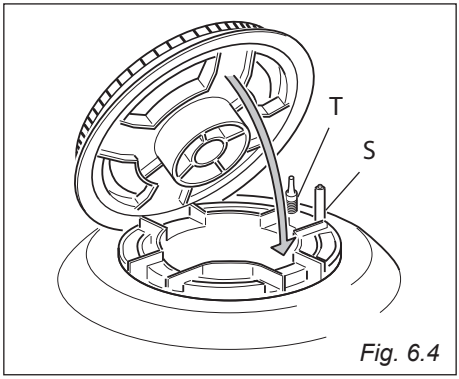

Fig. 6.4

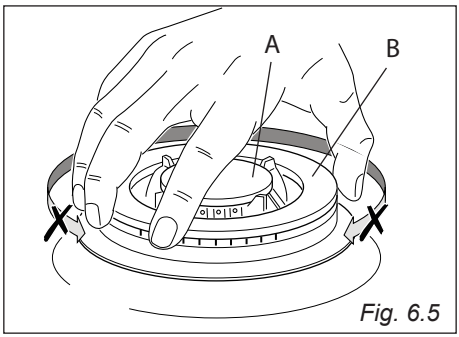

Fig. 6.5

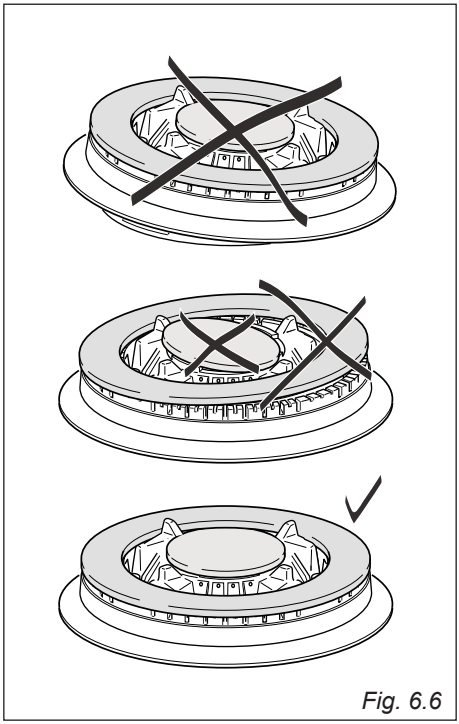
Fig. 6.6

FITTING THE OVEN SHELVES

The oven shelf is provided with a security block to prevent accidental extraction. It must be inserted operating as per figure 6.7.
To pull it out operate in the inverse order.

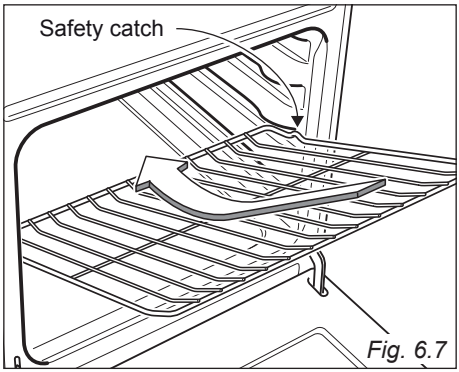

Fig. 6.7

DRAWER

The drawer (fig. 6.8) comes out like a normal drawer.

Do not store flammable material in the oven or in the drawer.

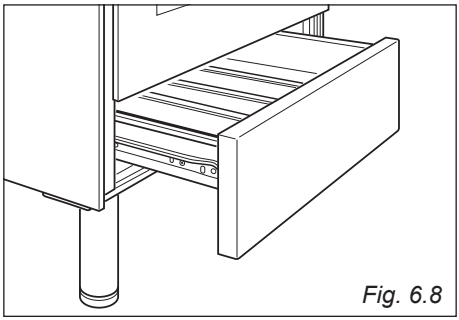
Fig. 6.8

REPLACING THE OVEN LAMP

WARNING: Ensure the appliance is switched off and disconnected from the electrical power supply before replacing the lamp to avoid the possibility of electric shock.

- Let the oven cavity and the heating elements to cool down.
- Switch off the electrical supply.
- Remove the protective cover "**A**" (fig. 6.9).
- Replace the halogen lamp "**C**" with a new one suitable for high temperatures (300°C) having the following specifications: 220-240 V, 50/60Hz and same power (check watt power as stamped in the lamp itself) of the replaced lamp.
  IMPORTANT WARNING: Never replace the bulb with bare hands; contamination from your fingers can cause premature failure. Always use a clean cloth or gloves.
- Refit the protective cover.

Note: Oven lamp replacement is not covered by your guarantee.

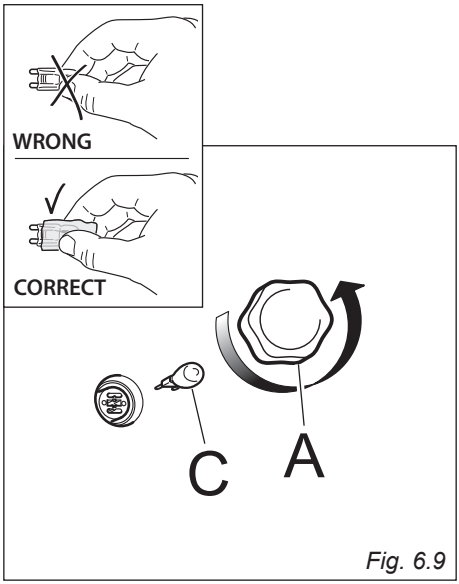

Fig. 6.9

REMOVING THE OVEN DOOR

The oven door can easily be removed as follows:

- Open the door to the full extent (fig. 6.11).
- Open the lever "**A**" completely on the left and right hinges (fig. 6.12).
- Hold the door as shown in fig. 6.10.
- Gently close the door until left and right hinge levers "**A**" are hooked to part "**B**" of the door (figs. 6.12, 6.13).
- Withdraw the hinge hooks from their location following arrow "**C**" (fig. 6.14).
- Rest the door on a soft surface.
- To replace the door, repeat the above steps in reverse order.

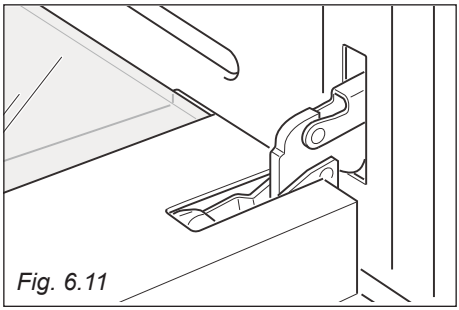

Fig. 6.11

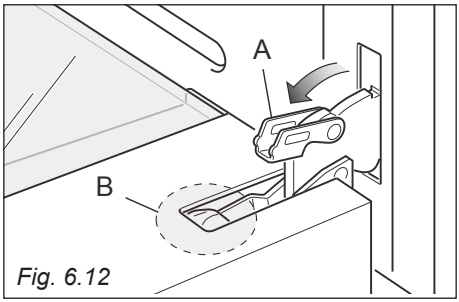

Fig. 6.12

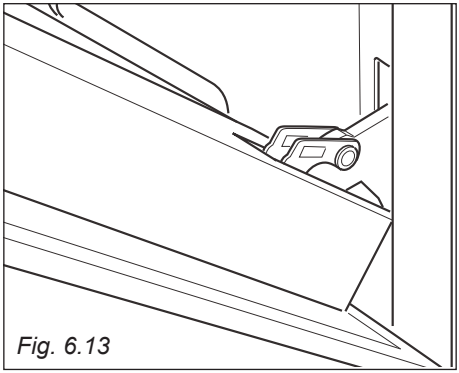

Fig. 6.13

Important!

Always keep a safe distance from the door hinges, paying special attention to position of your hands.

If the door hinges are not correctly hooked, they could unhook and close suddenly and unexpectedly with risk of injury.

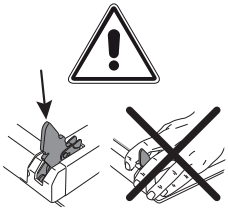

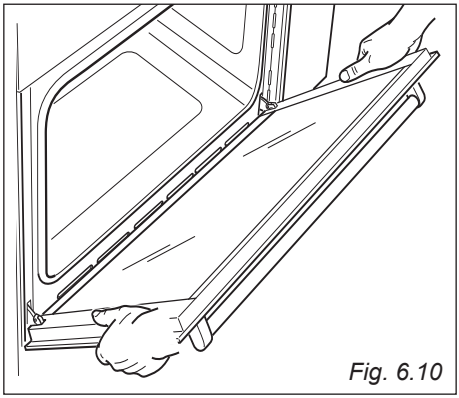

Fig. 6.10

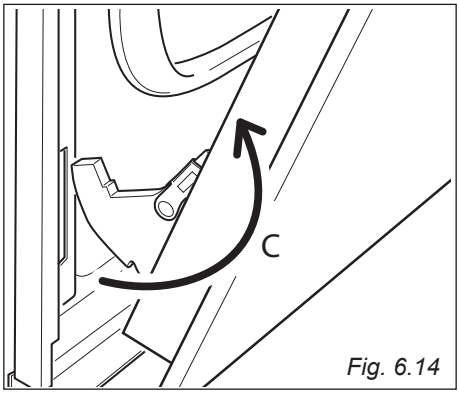

Fig. 6.14

REFIT THE DOOR

- Hold the door firmly (fig. 6.15).
- Insert the hinge tongues into the slots, making sure that the groove drops into place as shown in the fig. 6.16.
- Open the door to its full extent.
- Fully close the levers “**A**” on the left and right hinges, as shown in the figure fig. 6.17.
- Close the door and check that it is properly in place.

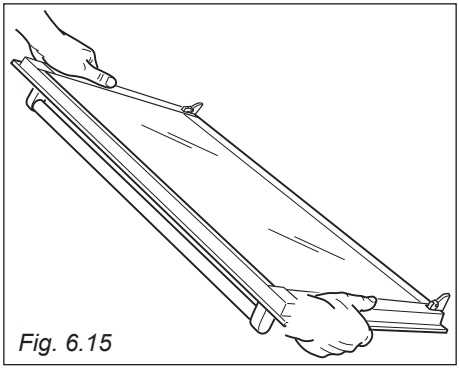

Fig. 6.15

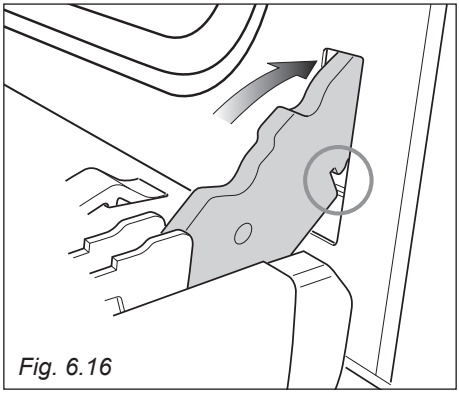

Fig. 6.16

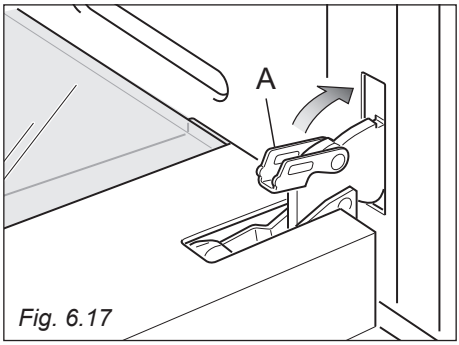

Fig. 6.17

REMOVING AND REPLACING THE INNER DOOR GLASS PANE FOR CLEANING

If you wish to clean the inner glass of the door, make sure you follow the precautions and instructions very carefully.
Replacing the glass pane and the door incorrectly may result in damage to the oven and may void your warranty.

IMPORTANT!

- Take care, the oven door is heavy.
  If you have any doubts, do not attempt to remove the door.
- Make sure the oven and all its parts have cooled down. Do not attempt to handle the parts of a hot oven.
- Take extreme care when handling the glass pane. Avoid the edges of the glass bumping against any surface. This may result in the glass shattering.
- Do not use harsh abrasive cleaners or sharp metal scrapers to clean the oven door glass since they can scratch the surface, which may result in shattering of the glass.
- If you notice any sign of damage on any of the glass panes (such as chipping, or cracks), do not use the oven. Call your Authorised Service Centre or Customer Care.
- Make sure you replace the glass pane correctly. Do not use the oven without glass pane correctly in place.
- If the glass pane feels difficult to remove or replace, do not force it. Call your Authorised Repairer or Customer Care for help.
  Note: Service visits providing assistance with using or maintaining the oven are not covered by your warranty.

REMOVING THE INNER PANE OF GLASS

The oven door is fitted with no. 2 panes:

- no. 1 outside;
- no. 1 inner.

To clean all panes on both sides it is necessary to remove the inner pane as follows:

1. **Lock the door open:**

- Fully open the oven door (fig. 6.18).
- Fully open the lever "**A**" on the left and right hinges. (fig. 6.19).
- Gently close the door until left and right hinge levers "**A**" are hooked to part "**B**" of the door (figs. 6.19, 6.20).

2. **Remove the inner pane:**

- Press the tabs on the sides of the glass retainer which is positioned at the top of the oven door (arrows in fig. 6.21), then gently remove the retainer (arrow 1 in fig. 6.22).
- Gently pull out the inner pane of glass (arrow 2 in fig. 6.22).

  IMPORTANT: It is advisable, while removing the glass, to keep pressed in position the four rubber pads "**D**" (fig. 6.23), by a finger, to avoid breakage or slippage of the rubber pads themselves.
- Clean the glass with an appropriate cleaner. Dry thoroughly, and place on a soft surface.

Now you can also clean the inside of the outer glass.

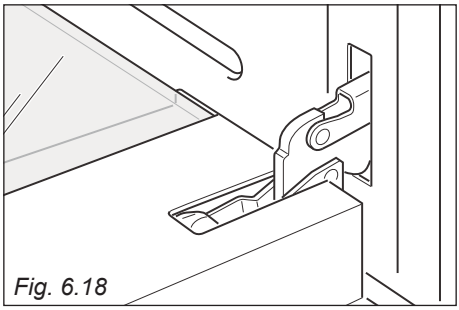

Fig. 6.18

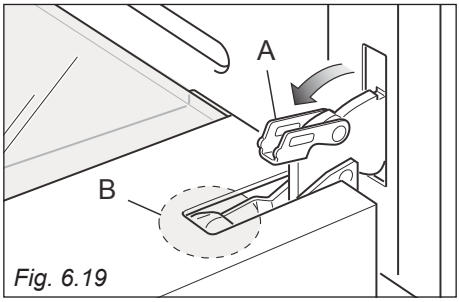

Fig. 6.19

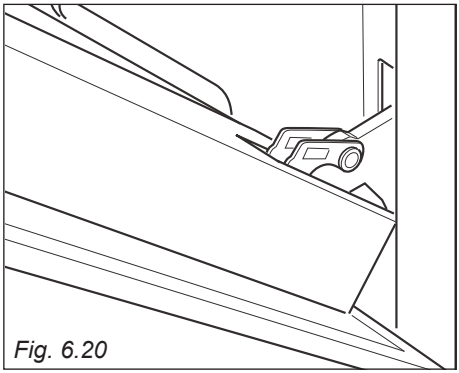

Fig. 6.20

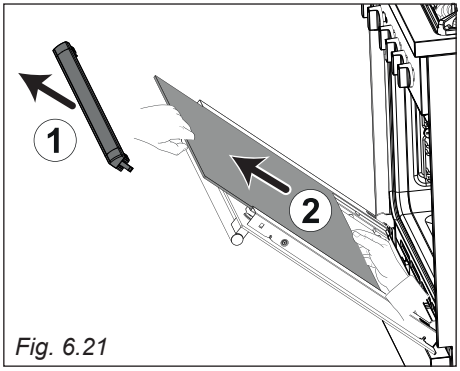

Fig. 6.21

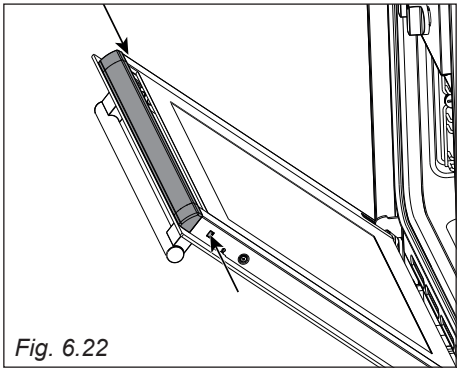

Fig. 6.22

AFTER CLEANING, REPLACE THE INNER GLASS PANE

When replacing the inner glass pane, make sure that:

- You replace the pane correctly, as shown. The pane must be in the position described below in order to fit into the door and to ensure that the oven operates safely and correctly.
- You take extra care not to bump the edges of the glass against any object or surface.
- You do not force the pane into place. If you are experiencing difficulties replacing the pane, remove it and start the process again from the beginning. If this still does not help, call Customer Care.

To reassemble the inner pane of the oven door operate as follows:

1. Make sure the door is locked open (see fig. 6.20).
2. Replace the inner pane:

- Check that the four rubber pads are in place ("**D**" in fig. 6.23).
  IMPORTANT: It is advisable, while refitting the glass, to keep pressed in position the four rubber pads "**D**", by a finger, to avoid breakage or slippage of the rubber pads themselves (fig. 6.24).
- Check that you are holding the pane the correct way. You should be able to read the wording on it as it faces you.
- Insert the pane in the left "**E**" and right "**F**" slide guides (fig. 6.24), and gently slide it to the retainers "**H**" (fig. 6.25).
- Gently push the glass retainer back into place. You should be able to hear the tabs on both sides click as they lock the glass retainer in (fig. 6.26). Please take special care to reassemble it correctly: if correctly fitted, the descending section shall be towards the inside of oven.

3. Unlock the oven door by opening it completely and closing the lever "**A**" on the left and right hinges (fig. 6.27).

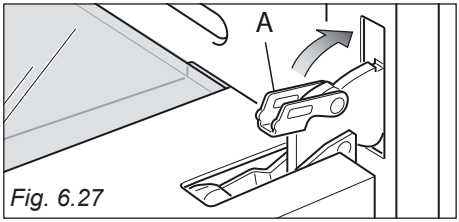

Fig. 6.27

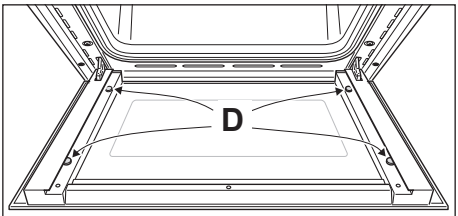

Fig. 6.23

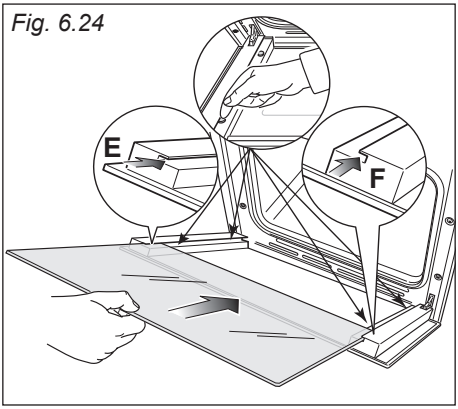

Fig. 6.24

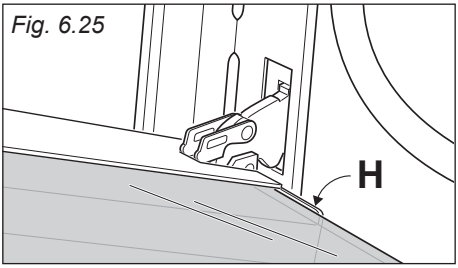

Fig. 6.25

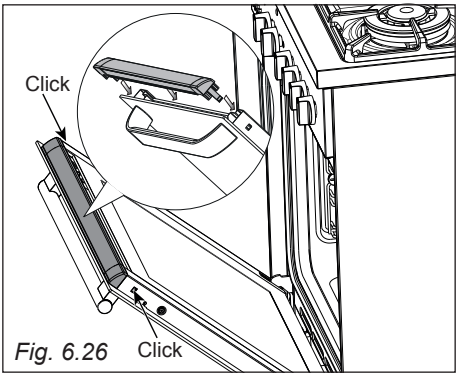

Fig. 6.26

Advice for the installer

IMPORTANT

- Cooker installation must only be carried out by QUALIFIED TECHNICIANS and in compliance with local safety standards. Failure to install the appliance correctly could invalidate any manufacturer's warranty.
- The appliance must be installed in compliance with regulations in force in your country and in observation of the manufacturer's instructions.
- Always disconnect the appliance from the electrical supply before carrying out any maintenance operations or repairs.
- Some appliances are supplied with a protective film on steel and aluminium parts. **This film must be removed before using the cooker.**

7 INSTALLATION

The installation conditions, concerning protection against overheating of the surfaces adjacent to the cooker, must conform to fig. 7.1a or 7.1b.
The appliance must be kept no less than 200 mm away from any side wall which exceeds the height of the hob surface (fig. 7.1a or 7.1b).
The appliance must be housed in heat resistant units.
The veneered syntetical material and the glue used must be resistant to a temperature of 90°C in order to avoid ungluing or deformations.
Curtains must not be fitted immediatly behind appliance or within 500 mm of the sides.
If the cooker is located on a pedestal it is necessary to provide safety measures to prevent falling out.

The appliance must be housed in heat resistant units.

The walls of the units must not be higher than work top and must be capable of resisting temperatures of 75 °C above room temperature.

Do not instal the appliance near inflammable materials (eg. curtains).

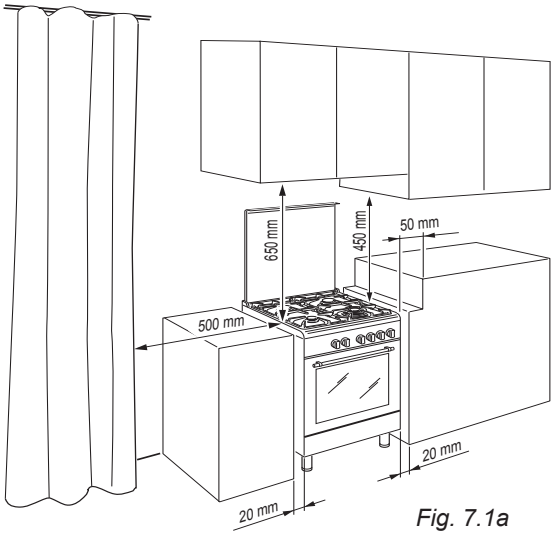

Fig. 7.1a

■ **Class 1**

(fig. 7.1a)

Gas connection made using rubber hose which must be visible and easily inspected or using rigid or flexible metal pipe.
A space of at least 2 cm must be left between the cooker and any adjacent furniture, which must not exceed the height of the cooktop.

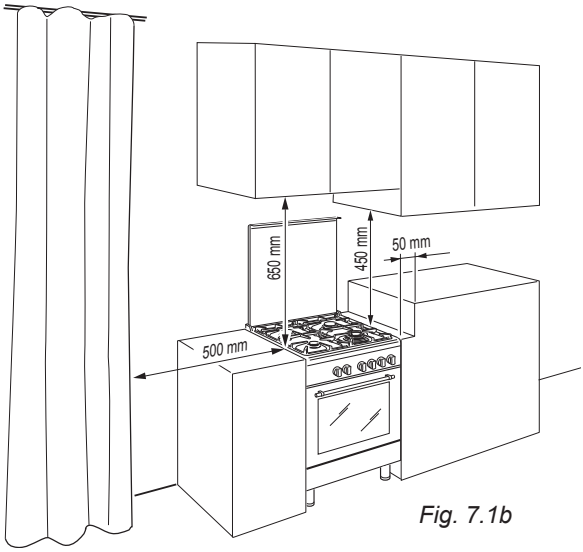

Fig. 7.1b

■ **Class 2**
■ **Subclass 1**

(fig. 7.1b)

Gas connection made using rigid or flexible metal pipe.

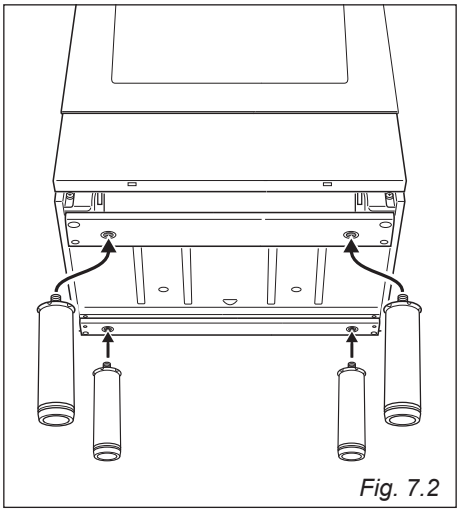

Fig. 7.2

FITTING THE ADJUSTABLE FEET AND LEVELLING THE COOKER

The adjustable feet must be fitted to the base of the cooker before use (fig. 7.2).
Rest the rear of the cooker on a piece of the polystyrene packaging exposing the base for the fitting of the feet.
Fit the 4 legs by screwing them tight into the support base as shown in figure 7.2.

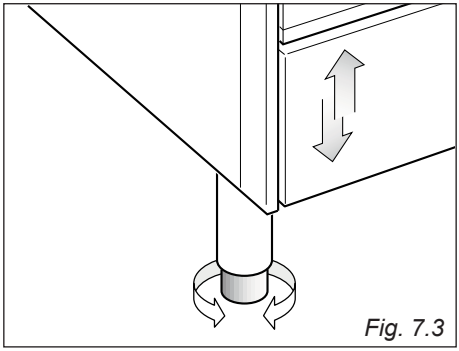

Fig. 7.3

LEVELLING THE COOKER

The cooker may be levelled by screwing the lower ends of the feet IN or OUT (fig. 7.3).

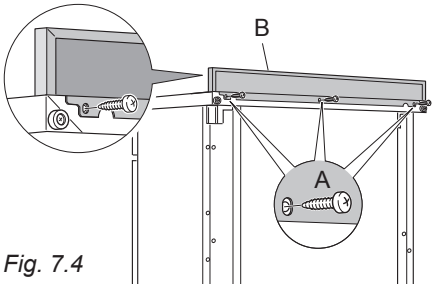

Fig. 7.4

FIXING THE BACKGUARD (SOME MODELS ONLY)

Before installing the cooker, assemble the backguard “**B**” .

The backguard “**B**” can be found packed at the rear of the cooker.

1. Before assembling, remove any protective film/ adhesive tape.
2. Remove the three screws “**A**” from the rear of the cooktop.
3. Assemble the backguard as shown and fix it by screwing the three screws “**A**”.

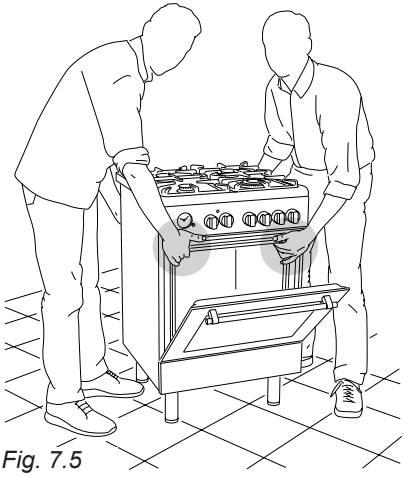

Fig. 7.5

MOVING THE COOKER

WARNING: When raising cooker to upright position always ensure two people carry out this manoeuvre to prevent damage to the adjustable feet (fig. 7.5).

WARNING

Be carefull: do not lift the cooker by the door handle when raising to the upright position (fig. 7.6).

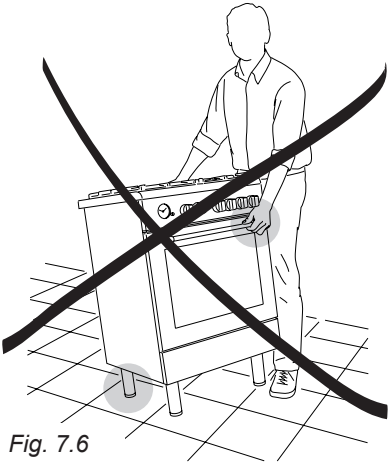

Fig. 7.6

WARNING

When moving cooker to its final position DO NOT DRAG (fig. 7.7).
Lift feet clear of floor (fig. 7.5).

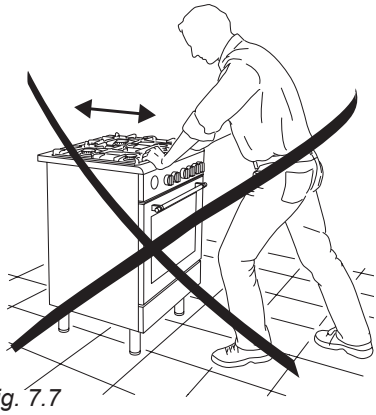

Fig. 7.7

ANTI-TILT BRACKET

Warning: This appliance must be restrained to prevent accidental tipping by fitting a bracket to the rear of the appliance and securely fixing it to the wall.

To fit the anti-tilt bracket:

1. After you have located where the cooker is to be positioned, mark on the wall the place where the 2 screws of the anti-tilt bracket have to be fitted. Please follow the indications given in fig. 7.8.
2. Drill two 8 mm diameter holes in the wall and insert the plastic plugs supplied.
   Important! Before drilling the holes, check that you will not damage any pipes or electrical wires.
3. Loosely attach the anti-tilt bracket with the 2 screws supplied.
4. Move the cooker to the wall and adjust the height of the anti-tilt bracket so that it can engage in the slot on the cooker's back, as shown in fig. 7.8.
5. Tighten the screws attaching the anti-tilt bracket.
6. Push the cooker against the wall so that the anti-tilt bracket is fully inserted in the slot on the cooker's back.

   Attention!
   When sliding the cooker into place pay special attention not to trap the power supply cable in the stability bracket.
   Pay special attention to the gas connection hose.

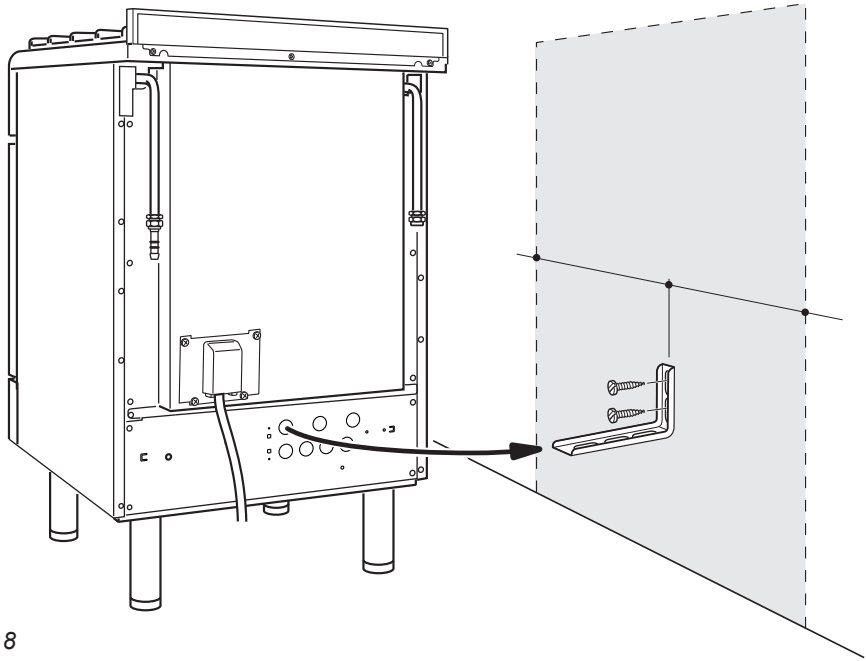

Fig. 7.8

VENTILATION REQUIREMENTS

The appliance must be installed in compliance with applicable local regulations concerning ventilation and the evacuation of exhaust gases.
Intensive and prolonged use may require extra ventilation, e.g. opening a window, or more efficient ventilation increasing the mechanical suction power if this is fitted.

CHOOSING SUITABLE SURROUNDINGS

The room where the gas appliance is to be installed must have a natural flow of air so that the gas can burn (in compliance with applicable local regulations).
The flow of air must come directly from one or more openings made in the outside walls with a free area of at least 100 cm^2 (or refer to applicable local regulations).
The openings should be near the floor and preferably on the side opposite the exhaust for combustion products and must be made so that they cannot be blocked from either the inside or the outside.
When these openings cannot be made, the necessary air can come from an adjacent room which is ventilated as required, as long as it is not a bed room or a danger area (in compliance with applicable local regulations).
In this case, the kitchen door must allow the passage of the air.

DISCHARGING PRODUCTS OF COMBUSTION

Extractor hoods connected directly to the outside must be provided, to allow the products of combustion of the gas appliance to be discharged (fig. 7.9).
If this is not possible, an electric fan may be used, attached to the external wall or the window; the fan should have a capacity to circulate air at an hourly rate of 3-5 times the total volume of the kitchen (fig. 7.10).
The fan can only be installed if the room has suitable vents to allow air to enter, as described under the heading “Choosing suitable surroundings”.

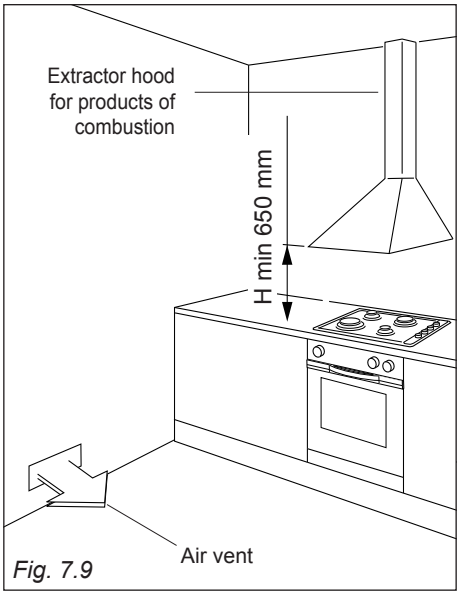

Fig. 7.9

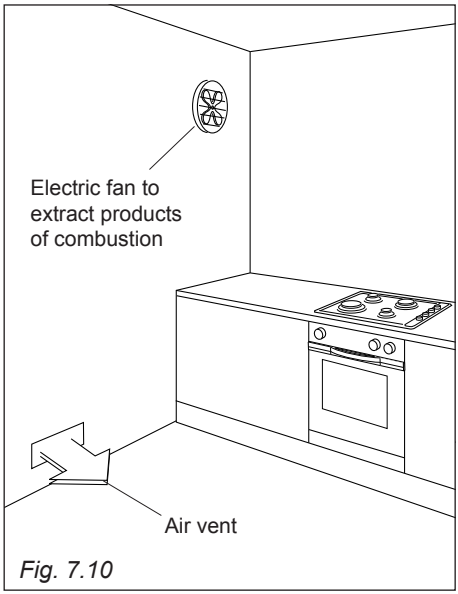

Fig. 7.10

8 GAS SECTION

GAS INSTALLATION REQUIREMENTS

Important !

- **The walls adjacent to the cooker must be of heat-resistant material.**
- **Before installation, make sure that the local distribution conditions (gas type and pressure) and the adjustment of this appliance are compatible. The appliance adjustment conditions are given on the plate or the label.**
- **This appliance must be installed and serviced only by a suitably qualified, registered installer. The installer shall refer to the local standards in force.**
- **Failure to install the appliance correctly could invalidate any manufacturer's warranty.**

This appliance is supplied for use on Natural gas or LPG (check the gas regulation label attached on the appliance).

- Appliances supplied for use on Natural gas: they are adjusted for this gas only and cannot be used on any other gas (LPG) without modification. The appliances are manufactured for conversion to LPG.
- Appliances supplied for use on LPG: they are adjusted for this gas only and cannot be used on any other gas (Natural gas) without modification. The appliances are manufactured for conversion to Natural gas.

If the Natural gas/LPG conversion kit is not supplied with the appliance this kit can be purchased by contacting the After-Sales Service.

FOR SOUTH AFRICA ONLY

The appliance is predisposed and adjusted to operate with the gas G30/G31 (LPG USE).
Operating pressure: 2,8 kPa.

This appliance is manufactured for conversion to G20 (NATURAL GAS) if required and is supplied with a conversion kit.
This appliance must only be connected to NATURAL GAS after a NATURAL GAS conversion kit has been fitted.

CONNECTING THE APPLIANCE TO THE GAS SUPPLY

The gas connection must be carried out by an authorised person according to the relevant standards.
Ensure that the room in which the cooker is to be installed is adequately ventilated, in compliance with applicable regulations.

- Connect the cooker to the gas mains utilizing rigid or flexible pipes.
- The gas supply is connected at the rear of the cooker to the right or left terminal of the gas inlet pipe (fig. 8.1a). The connection pipe must not cross the rear of the appliance.
- The unused inlet pipe must be closed off with the plug and sealing washer supplied (fig. 8.1b).

Fig. 8.1a

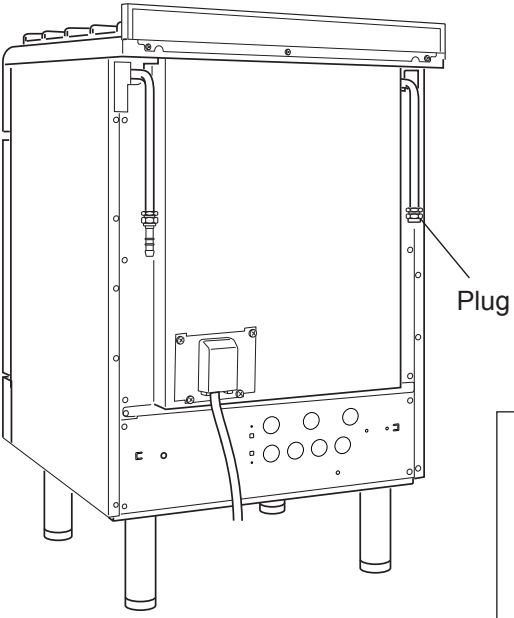

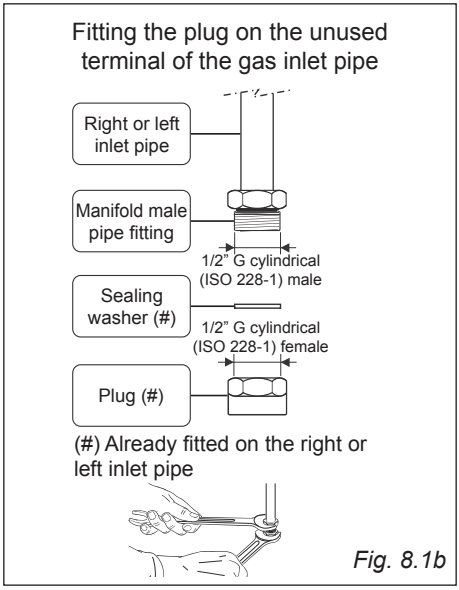

Fig. 8.1b

POSSIBLE GAS CONNECTIONS

GAS CONNECTION WITH A RUBBER HOSE

Imporant!

A rubber hose connection shall only be made if permitted by the applicable local regulations.

The gas connection is made up of:

- the terminal fitting of the inlet pipe (right-hand or left-hand);
- sealing washer;
- the appropriate hose holder (for Natural gas or LPG). If not supplied with the appliance it can be purchased by contacting the After-Sales Service.

Connecting the cooker to Natural gas

1. If not already fitted, fit the Natural gas hose holder on the inlet pipe, making sure that you place the sealing washer between them (as shown in fig. 8.2).
2. Connect the cooker to the gas supply using a suitable rubber hose (internal diameter 15 mm).
   The hose must comply with the applicable local regulations and be of the correct construction for the type of gas being used.
3. Make sure that the hose is tightly and securely fitted at both ends.
4. Use a standard hose clamp (not supplied) to fasten the hose.

Connecting the cooker to LPG

1. If not already fitted, fit the LPG hose holder on the inlet pipe, making sure that you place the sealing washer between them (as shown in fig. 8.2).
2. Connect the cooker to the gas supply using a suitable rubber hose (internal diameter 6 mm).
   The hose must comply with the applicable local regulations and be of the correct construction for the type of gas being used.
3. Make sure that the hose is tightly and securely fitted at both ends.
4. Use a standard hose clamp (not supplied) to fasten the hose.
5. Install a gas pressure regulator.

Important!

To comply with applicable local regulations, a gas pressure regulator (conforming to the local regulations in force) must be installed when connecting the cooker to an LPG cylinder.

When connecting the cooker to the gas supply with a rubber hose, make sure that

- the hose is as short as possible, without twists or kinks.
- the hose is not longer than 750 mm (or refer to applicable local regulations) and does not come into contact with sharp edges, corners or moving parts. Use a single rubber hose only; never connect the appliance with more than one rubber hose.
- the hose is not under tension, twisted, kinked, or too tightly bent, neither while the appliance is in use nor while it is being connected or disconnected.
- the hose does not come into contact with any part of the cooker with a surface temperature of 70°C or above (or refer to applicable local regulations).
- the hose is not subject to excessive heat by direct exposure to flue products or by contact with hot surfaces.
- the hose can easily be inspected along its entire length to check its condition.

- the hose is replaced at the printed due date or if it shows signs of wear or damage, and replaced regardless of its condition after a maximum of three years.
- you inform the customer that the gas cylinder valve or the gas supply valve immediately by the cooker should be closed when the cooker is not in use.
- you inform the customer that the hose should not be subjected to corrosion by acidic cleaning agents.

After connecting the cooker to the gas supply, make sure that you

- check that the connections are correctly sealed using a soapy solution, but never a naked flame.
- check whether the injectors are correct for the type of gas being used. If not, follow the instructions under “GAS MAINTENANCE”.
- replace the sealing washer/s on the slightest sign of deformation or imperfection. The sealing washer/s is/are the part/s which guarantees a good seal in the gas connection.
- use two spanners when fitting the hose holder (fig. 8.2).

Gas connection with rubber hose holders

Note: if not already fitted on the inlet pipe, the hose holders are supplied with the product in a separate kit; if not supplied with the appliance they can be purchased by contacting the After-Sales Service.

(Important: to be used ONLY IF PERMITTED by the local applicable regulations)

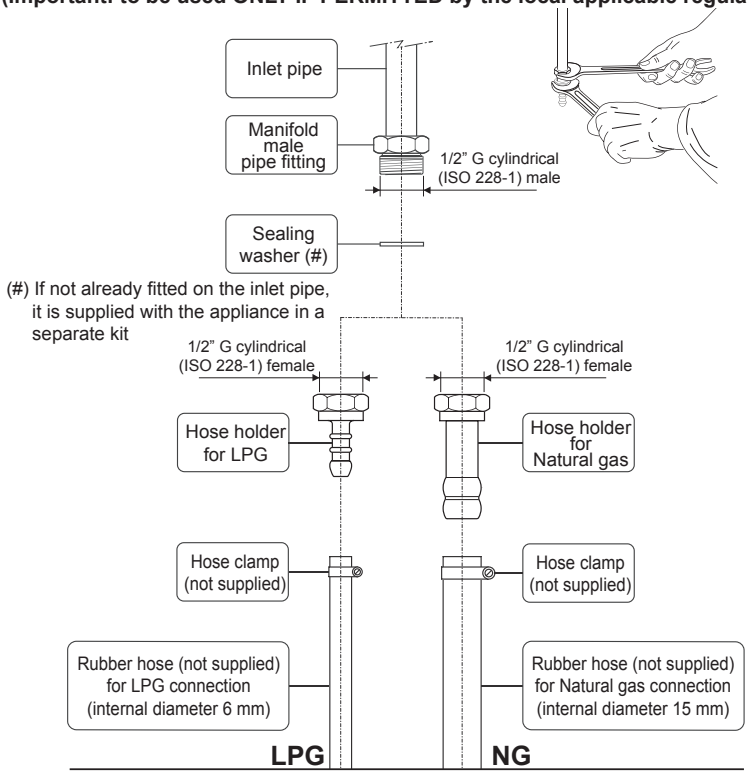

Fig. 8.2

GAS CONNECTION WITH RIGID PIPES OR A FLEXIBLE PIPE

The gas connection is made up of:

- the terminal fitting of the inlet pipe (right-hand or left-hand)
- sealing washer.

Important!

If fitted, remove the hose holder from the terminal fitting of the inlet pipe.

When connecting the cooker to the gas supply with rigid pipes or a flexible pipe, make sure that

- you use rigid pipes or a flexible pipe complying with applicable local regulations. The flexible pipe shall be of the correct construction for the type of gas being used.
- if compression fittings are used, you tighten them firmly using two spanners (fig. 8.3).
- the connection with rigid metal pipes does not cause stress or pressure to the gas piping.
- the flexible pipe is not under tension, twisted, kinked or too tightly bent, neither while the appliance is in use nor while it is being connected or disconnected.
- the flexiple pipe does not exceed 2000 mm in length (or refer to applicable local regulations) and does not come into contact with sharp edges, corners or moving parts. Use a single flexible pipe only; never connect the cooker with more than one flexible pipe.
- the flexible pipe can easily be inspected along its entire length to check its condition; if it has an expiry date, it should be replaced before that date.
- if using a flexible pipe which is not entirely made of metal, make sure that it does not come into contact with any part of the cooker with a surface temperature of 70°C or above (or refer to applicable local regulations).
- the hose is not subject to excessive heat by direct exposure to flue products or by contact with hot surfaces.
- the rigid or flexible pipe is replaced if it shows signs of wear or damage.
- a gas pressure regulator, in compliance with the applicable local regulations, is installed when connecting to an LPG cylinder.
- you inform the customer that the cylinder valve or the supply valve immediately by the appliance should be closed when the cooker is not in use.
- you inform the customer that the rigid or flexible pipe should not be subjected to corrosion by acidic cleaning agents.

After connecting the cooker to the gas supply, make sure that you

- check that the connections are correctly sealed using a soapy solution, but never a naked flame.
- check whether the injectors are correct for the type of gas being used. If not, follow the instructions under “GAS MAINTENANCE”.
- replace the sealing washer/s on the slightest sign of deformation or imperfection. The sealing washer/s is/are the part/s which guarantee/s a good seal in the gas connection.
- use two spanners when connecting the rigid or flexible pipe (fig. 8.3).

Gas connection with rigid or flexible pipe

Note: if already fitted on the inlet pipe, remove the rubber hose holder

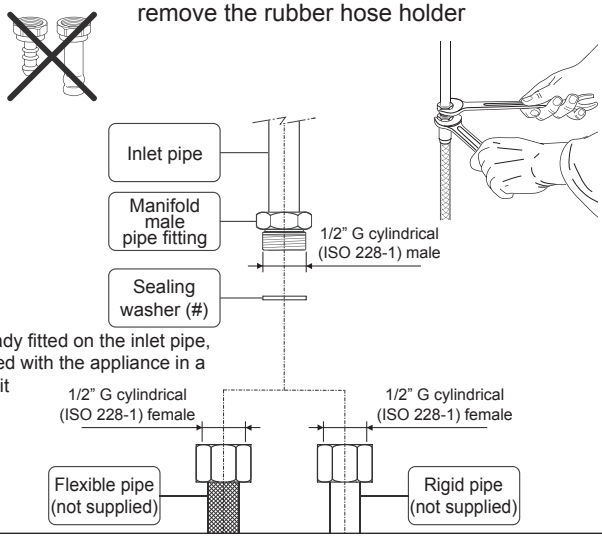

Fig. 8.3

GAS MAINTENANCE

TABLE FOR THE CHOICE OF THE INJECTORS - Cat. II 2H 3+				
BURNERS	Nominal power [kW]	Reduced power [kW]	**LPG** G30 28-30 mbar G31 37 mbar	**Natural Gas** G20 20 mbar
			Ø injector [1/100 mm]	Ø injector [1/100 mm]
Auxiliary (A)	1,00	0,30	50	72 (X)
Semi-rapid (SR)	1,75	0,45	65	97 (Z)
Triple-ring (TR)	3,50	1,50	95	135 (T)

AIR VENT NECESSARY FOR GAS COMBUSTION = (2 m^3/h x kW)	
BURNERS	Air necessary for combustion [m^3/h]
Auxiliary (A)	2,00
Semi-rapid (SR)	3,50
Triple-ring (TR)	7,00

LUBRICATION OF THE GAS TAPS

- In case of difficulty in the gas taps operation, call Service.

IMPORTANT

All intervention regarding installation maintenance of the appliance must be fulfilled with original factory parts.

The manufacturer declines any liability resulting from the non-compliance of this obligation.

REPLACEMENT OF THE INJECTORS

If the injectors are not supplied they can be obtained from the "Service Centre".

Select the injectors to be replaced according to the "Table for the choice of the injectors".
The nozzle diameters, expressed in hundredths of a millimetre, are marked on the body of each injector.

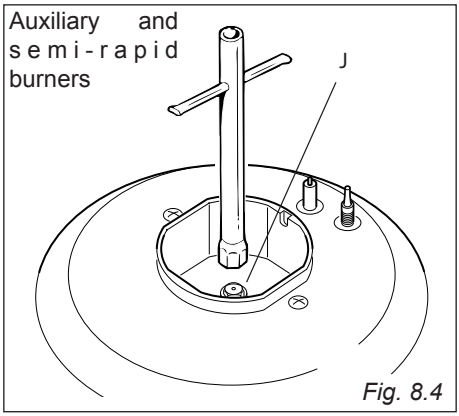

Fig. 8.4

REPLACEMENT OF THE INJECTORS OF THE COOKTOP BURNERS

To replace the injectors proceed as follows:

- Remove pan supports and burners from the cooktop.
- Using a wrench, substitute the nozzle injectors "**J**" (figs. 8.4, 8.5) with those most suitable for the kind of gas for which it is to be used.

The burners are conceived in such a way so as not to require the regulation of the primary air.

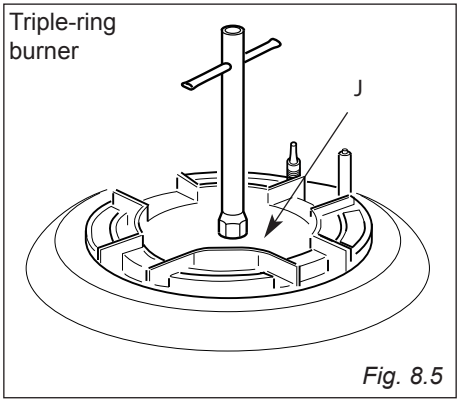

Fig. 8.5

ADJUSTING OF THE MINIMUM OF THE TOP BURNERS

In the minimum position the flame must have a length of about 4 mm and must remain lit even with a quick turn from the maximum position to that of minimum.

The flame adjustment is done in the following way:

- Turn on the burner.
- Turn the tap to the MINIMUM position.
- Take off the knob.
- With a thin screwdriver turn the screw "**F**" until adjustment is correct (fig. 8.6).

Normally for G30/G31 (LPG), the regulation screw is tightened up.

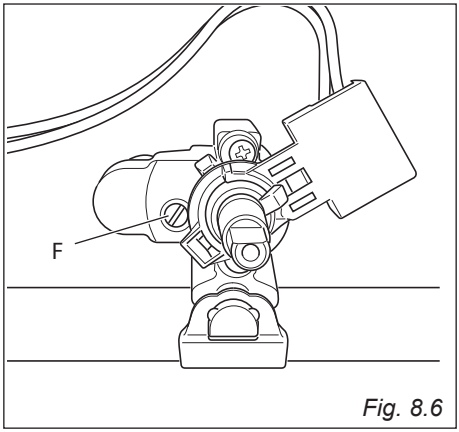

Fig. 8.6

9 ELECTRICAL SECTION

IMPORTANT: The cooker must be installed in accordance with the manufacturer's instructions.
Incorrect installation, for which the manufacturer accepts no responsibility, may cause damage to persons, animals and things.

GENERAL

- Connection to the mains must be carried out by qualified personnel in accordance with current regulations.
- The appliance must be connected to the mains checking that the voltage corresponds to the value given in the rating plate and that the electrical cable sections can withstand the load specified on the plate.
- Models supplied with plug: The plug must be connected to an earthed socket in compliance with safety standards.
- Models supplied without plug: The appliance is supplied without a power supply plug and therefore if you are not connecting directly to the mains, a standardized plug suitable for the load must be fitted.
- The appliance can be connected directly to the mains placing an omnipolar switch with minimum opening between the contacts of 3 mm between the appliance and the mains.
- The power supply cable must not touch the hot parts and must be positioned so that it does not exceed 75°C at any point.
- Once the appliance has been installed, the switch or socket must always be accessible.
- If the power supply cable is damaged it must be substituted by a suitable cable available in the after sales service.

N.B. For connection to the mains, do not use adapters, reducers or branching devices as they can cause overheating and burning.

If the installation requires alterations to the domestic electrical system or if the socket and appliance plug are incompatible, call an expert.
He should also check that the socket cable section is suitable for the power absorbed by the appliance.

Before effecting any intervention on the electrical parts of the appliance, the connection to the network must be interrupted.

The connection of the appliance to earth is mandatory.
The manufacturer declines all responsability for any inconvenience resulting from the inobservance of this condition.

CONNECTION OF THE POWER SUPPLY CABLE

WARNING: If the power supply cable is damaged, it must be replaced only by an authorised service agent in order to avoid a hazard.

- Unhook the terminal board cover by inserting a screwdriver into the two hooks "**A**" (fig. 9.1).
- Open the cable gland by unscrewing screw "**F**" (fig. 9.2), unscrew the terminal screws.
- Insert the feeder cable of the suitable section (as described in the next chapter) into the cable gland.
- Connect the phase, neutral and earth cables to the terminal block according to the diagram in figure 9.3.
- Pull the feeder cable and block it with cable gland.
- Close the terminal block cover (check the two hooks "**A**" are correctly hooked).

NOTE: The earth conductor must be left about 3 cm longer than the others.

IMPORTANT: To connect the power supply cable DO NOT unscrew the screws fixing the cover plate behind the terminal block.

FEEDER CABLE SECTION
Type "H05RR-F"

220-240 V ac 3 x 1,5 mm^2 (*) (**)

(*) Connection possible with plug and outlet
(**) Connection with wall box connection.

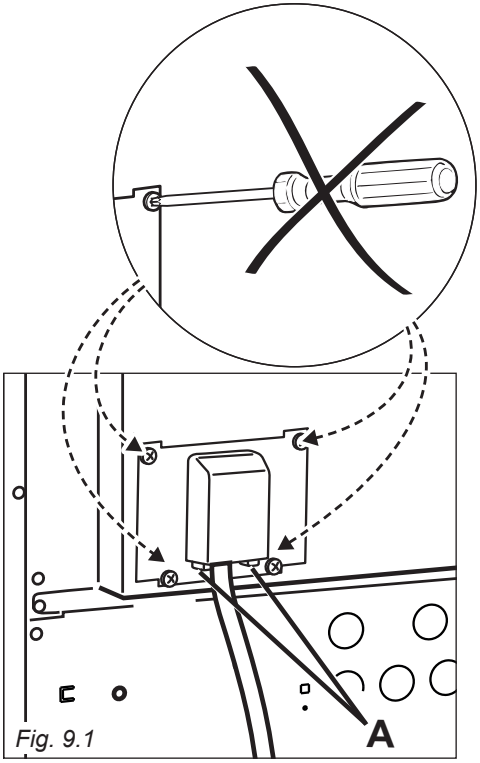

Fig. 9.1

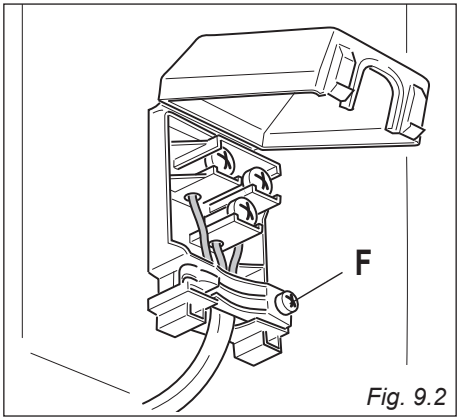

Fig. 9.2

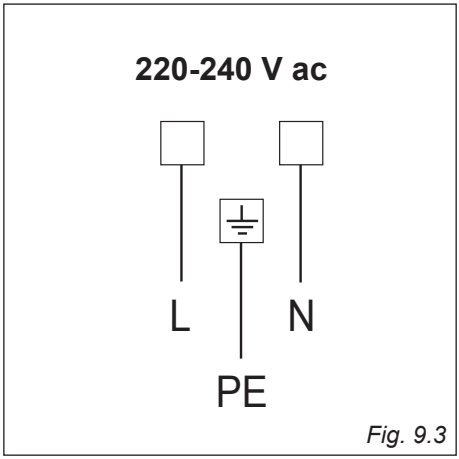

Fig. 9.3

The manufacturer cannot be held responsible for possible inaccuracies due to printing or transcription errors in the present booklet.
The manufacturer re serves the right to make all modifications to its products deemed necessary for manufacturer commercial reasons at any moment and without prior notice, without jeopardising the essential functional and safety characteristics of the appliances.

www.elba-cookers.com

ELBA

TALENT FOR COOKING

Made in Italy

Cod. 1105723 - ß0